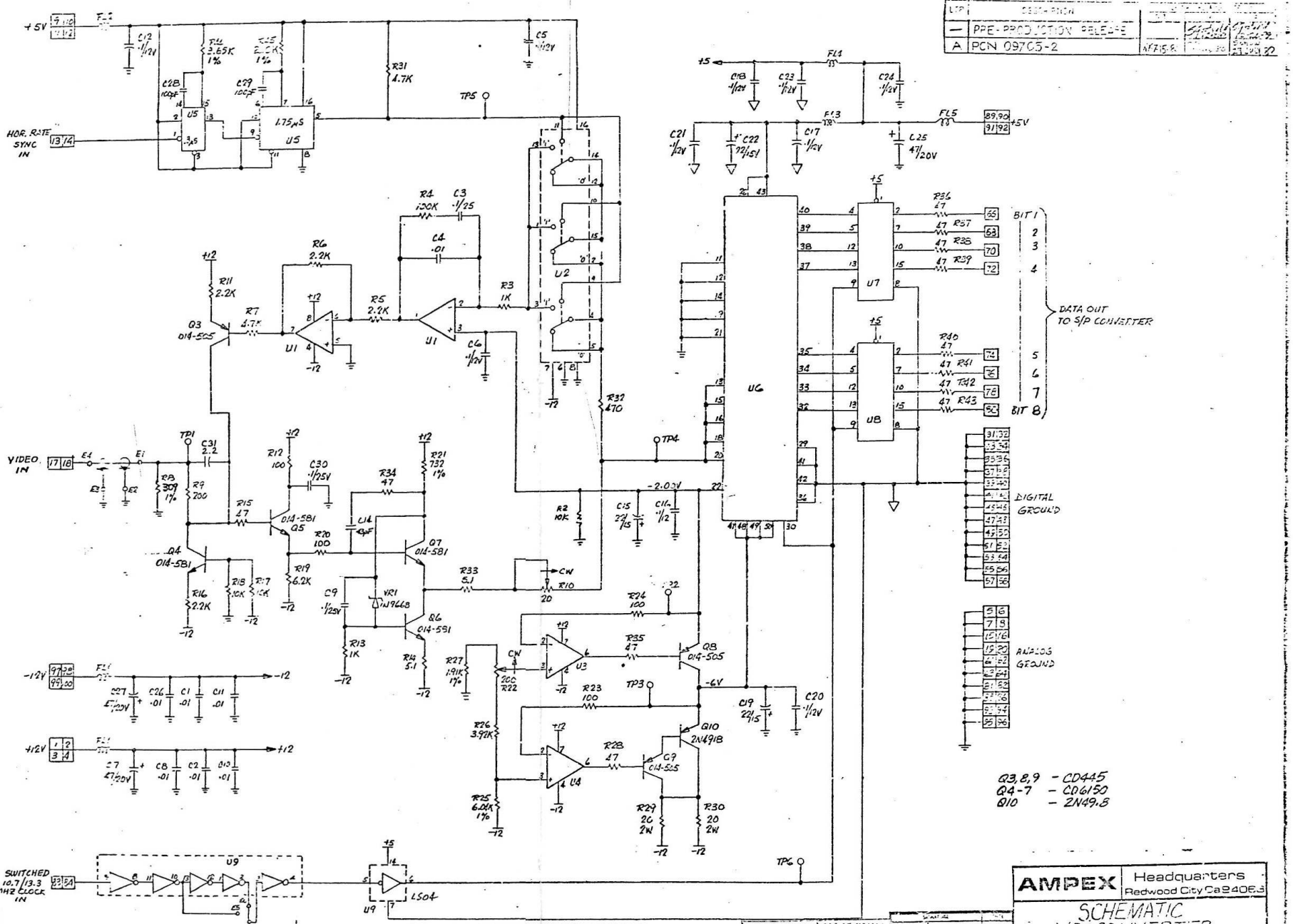

LTR	DESCRIPTION
—	PRE-PRODUCTION RELEASE
A	PCN 09705-2

NOTES: UNLESS OTHERWISE SPECIFIED.

1. SCHEMATIC REFLECTS PWA 1379551.
2. PINS NOT CONNECTED ARE 21-30, 43, 44, 59, 60, 65, 67, 69, 71, 73, 75, 77, 79, 87, 88,

I.C. LIST							
REF DESIG	U1	U2	U3,4	U5	U6	U7,8	U9
AMPEX PIN	509-427	587-723	586-764	587-537	589-685	587-152	587-533
VENDOR PIN	TL082CP	CD405356	741	74157	TDC1007J	745175	74LS04
VOLTAGE PIN	+12 (8)	+5V (16)	+12 (7)	+5 (16)	+5 (28,44)	+5 (16)	+5 (14)
GND PIN	-12 (4)	-12 (7) 6,8	-12 (4)	8	[illegible]	8	7

	ARR-25, HS1000		
	TDC-800, TDC-[illegible]		
1379551	[illegible]		
NEXT ASSY	USED ON		
APPLICATION			

AMPEX Headquarters Redwood City Ca 94063

SCHEMATIC A/D CONVERTER

C 1379554

MODEL SHEET 1 OF 1